CB 640 HC

Ice Cube

Self-contained ice maker - Sprayer system
Daily production up to 73 kg

Hotel	■■■■■■■■■■
Restaurant	■■■■■■■■■■
Fast food	■□□□□□□□□□
Bar	■■■■■■■■■■
Disco	■■■■■■■■■■
Fish market	□□□□□□□□□□
Supermarket	□□□□□□□□□□
Medical & SPA	□□□□□□□□□□
Industry	■□□□□□□□□□

▶ Position n°

▶ Features & Plus

- Compact and crystal cube
- AISI 304 SS Scotch Brite finish
- Tropical class +43°C
- Adjustable Stainless Steel feet
- Removable and cleanable air filter
- Air or water cooling system
- Easy cleanable internal rounded surfaces
- HCFC-Free insulated storage
- RoHS Free
- Disappearing insulated door
- Electromechanical operation
- ON-OFF rocker switch
- Standard and special voltages
- HFC Free
- Automatic Washing system

AISI 304 SS Scotch Brite finish

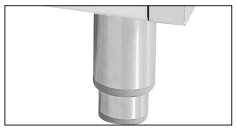

Adjustable Stainless Steel feet

Removable and cleanable air filter

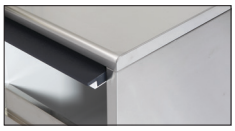

Disappearing insulated door

▶ Available ice cube size

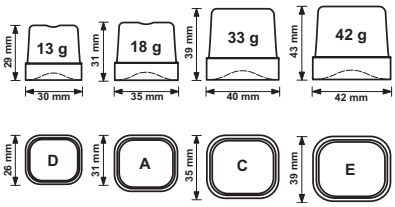

▶ Prod. 24h

Air temp.		Water temp.		kg	lbs
10° C	50° F	7° C	45° F	73	161
21° C	70° F	15° C	60° F	72	159

2 Years Warranty
subject to limitations

▶ Certifications available for this model

www.bremaice.it
info@bremaicegroup.it

We are Brema

Ice Cube

CB 640 HC

BREMA Ice Makers

Self-contained ice maker - Sprayer system
Daily production up to 73 kg

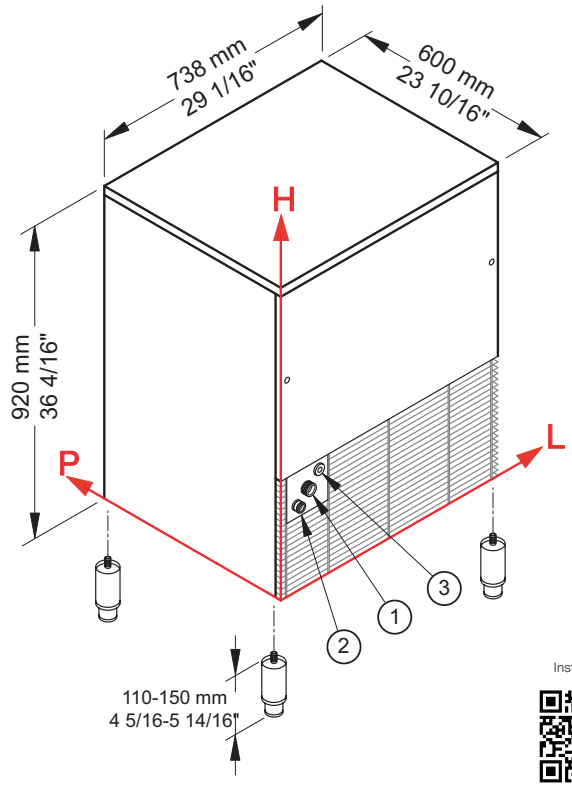

Installation

▶ Working conditions

- Location: **Indoor**

	Min	Max
Ambient temperature	+10° C / +50° F	+43° C / 110° F
Water temperature	+3° C / +37° F	+32° C / +90° F
Voltage	-10%	+10%
Water inlet pressure	1bar (14 psi)	6bar (84 psi)

▶ Performances

Air temperature	Water temperature 7° C	45° F	15° C	60° F	21° C	70° F
10° C	73 kg					
50° F		161 lbs				
21° C			72 kg			
70° F				159 lbs		
32° C					62 kg	
90° F						137 lbs

▶ Connections

All measures are referred to the rear bottom-left corner (L-H-Ø)

① Water in.: 116 mm / 4 9/16" - 285 mm / 11 4/16" - 3/4"
② Water out.: 54 mm / 2 2/16" - 245 mm / 9 10/16" - 24 mm / 15/16"
③ Electrical connections: 161 mm / 6 5/16" - 321 mm / 12 10/16"

▶ Technical information

Production in 24h	72 kg / 159 lbs
Store capacity, up to	40 kg / 88 lbs
Cooling system	A - W
Kind of cube	A-18g, C-33g, D-13g, E-42g
Refrigerant	R290
Standard voltage	220-240 V ~ 50 Hz
Average power consumption	620 W
Fuse	10 A
Electrical consumption	22 kWh/100kg

Water consumption	A: 3 l/kg - 36 gal/100 lbs
	W: 16 l/kg - 192 gal/100 lbs
Sizes (L-P-H mm)	738 - 600 - 920
(L-P-H in)	29 1/16 - 23 10/16 - 36 4/16
Sizes with pack (L-P-H mm)	780 - 640 - 1085
(L-P-H in)	30 11/16 - 25 3/16 - 42 11/16
Net weight	77 kg / 170 lbs
Gross weight	89 kg / 196 lbs
Finish	AISI 304 stainless steel, scotch brite

All the technical information must be considered at the following conditions:
Sizes without feet
Standard Cube (18 g)
Ambient temperature +21° C
Water temperature +15° C
Electrical consumption at +32° C (standard voltage)
Average power consumption at +43° C (standard voltage)

Models and specifications are subject to change without notice

Rev. 00 - Issued March 2021

BREMA Ice Makers
www.bremaice.it
info@bremaicegroup.it

We are Brema